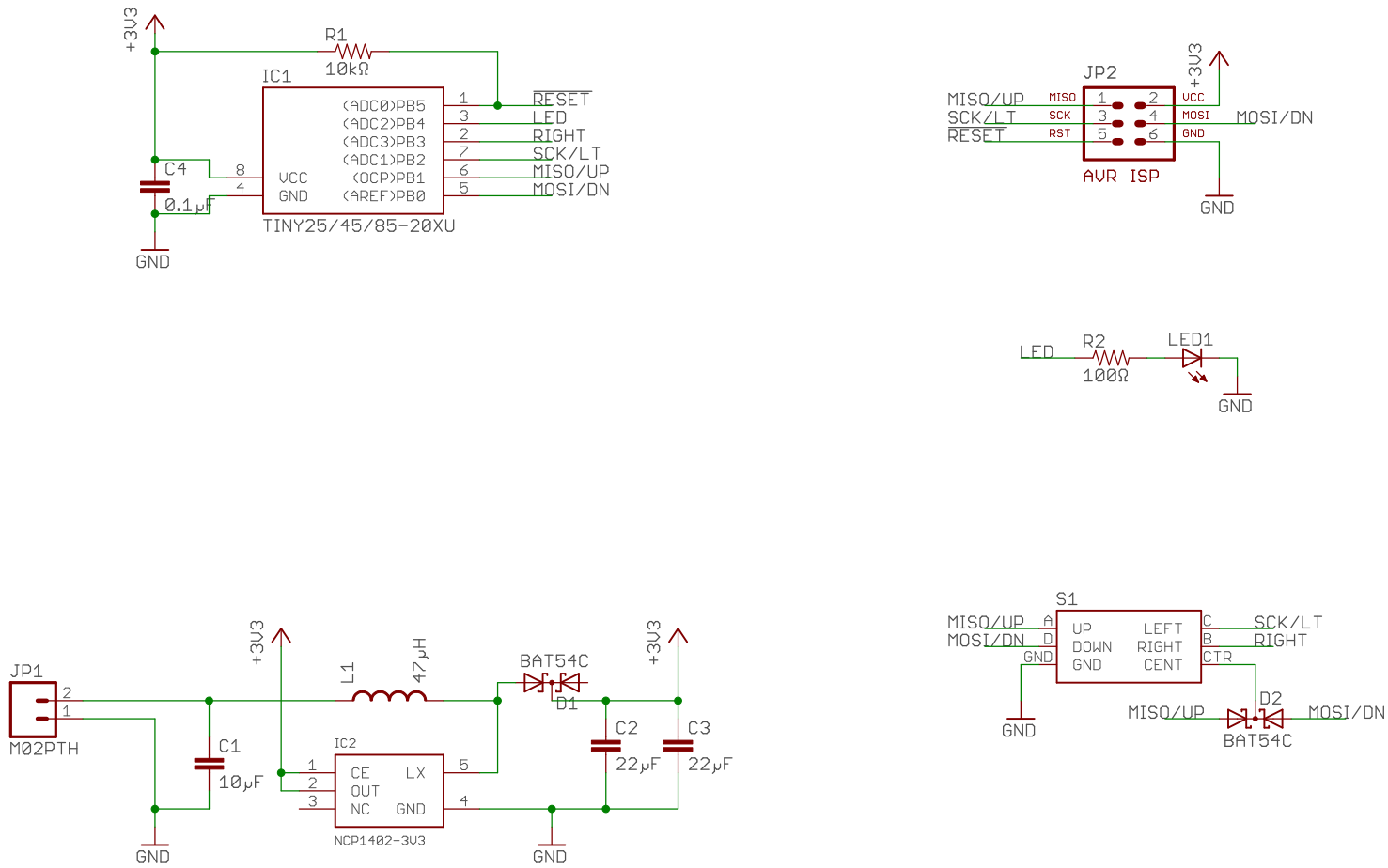

TITLE: hacker IR

Document Number:

REV:

Date: 6/12/16 11:02 PM

Sheet: 1/1